ifm electronic

CE

Installation instructions
Compact speed monitor M18

ecomat200®

DI6001

UK

11430428 / 00 02 / 2009

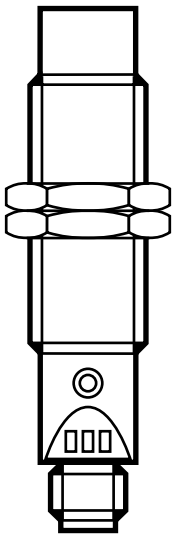

1 Preliminary note

1.1 Symbols used

▶ Instruction

→ Cross-reference

Important note
Non-compliance can result in malfunctions or interference.

Information
Supplementary note

2 Safety instructions

The unit must be connected by a qualified electrician. Observe the national and international regulations for the installation of electrical equipment.

3 Functions and features

The unit detects without contact if a set rotational speed is not reached and signals this by means of a switching signal. The pulse output enables the external evaluation of the damping pulses.

▶ Nominal sensing range (Sn) and operating voltage see type label.

4 Installation

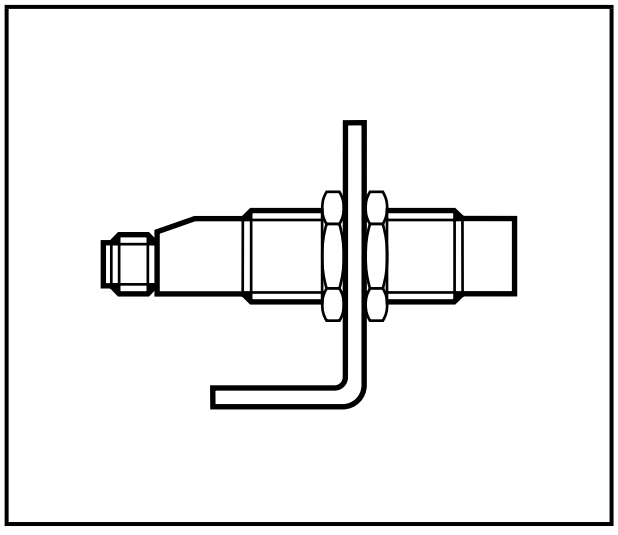

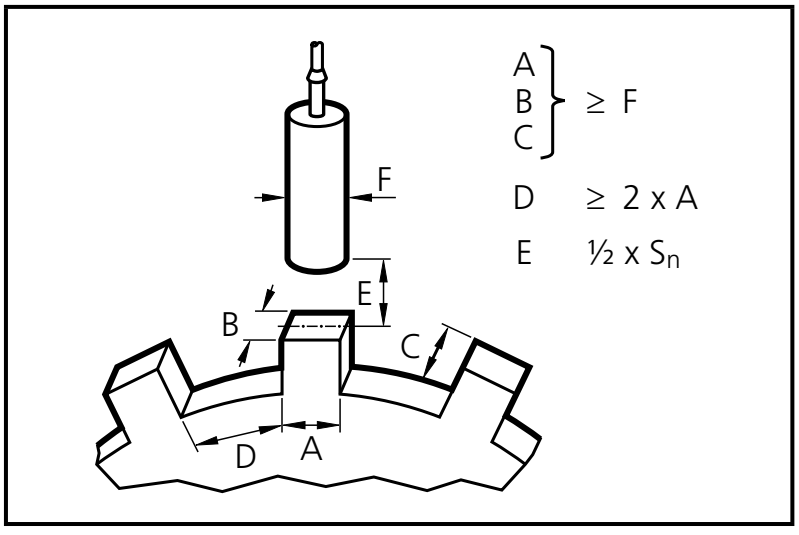

▶ Fix the unit by means of a mounting device and secure it by means of the nuts provided so that it cannot work loose.

▶ Adhere to the above dimensions to ensure a correct function.

Non flush mountable.

5 Electrical connection

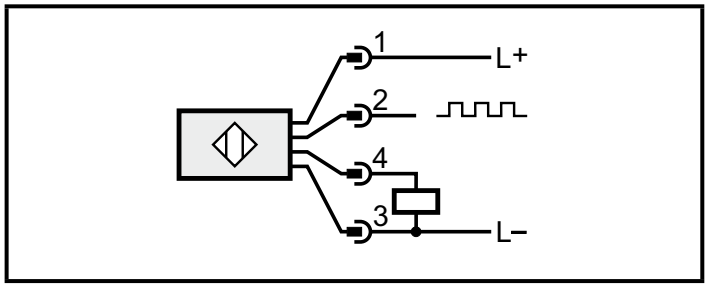

1. L+
2. pulse output (the pulse sequence corresponds to the damping frequency)
3. L-
4. switching output (adjustable)

6 Operating and display elements

View	LED		Status	Meaning
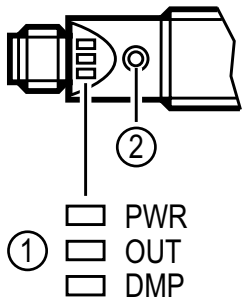	PWR	green	ON	operating voltage OK
	OUT	yellow	ON	output is switched
	DMP	green	pulse	damping pulse
			1 Hz 2 Hz double flash	time periods during the setting operation (→ 8 setting operation)
	OUT + DMP	yellow green	flashing alternately	Settings locked or setting not accepted

1: LEDs
2: set button

7 Adjustable parameters

Parameter		Value range	Preset teach value
SP	switch point (= teach value x 0.8)	3...6000 pulses/ min	100 pulses/min
$t_{AÜ}$	Start-up delay	0...15 s	10 s
Output	output function	normally open / normally closed	NO (output closed when speed > switch point)
Key	locking	on/off	off

8 Setting operation

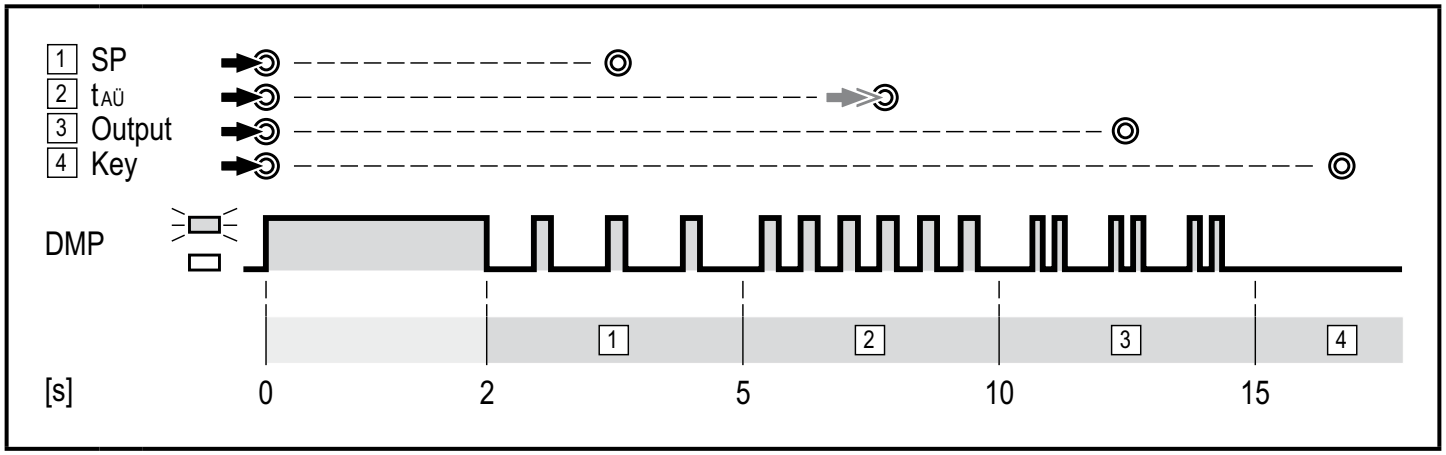

= press the button and keep it pressed
= release the button = setting stored
= release the button and press n times (0 times = 0 s, 1 time = 1 s, etc.)

The setting operation is divided into time periods (steps) with a duration of approx. 3 and 5 seconds. The time periods are indicated by different flashing frequencies of the DMP LED. The corresponding setting is stored within a time period by releasing the pressed button.

Step	Setting	To store:
1	set the switch point	release the button
2	set the start-up delay	release the button press the button n times, wait 5 s after the last push of the button
3	change the output function (NO - NC, NC - NO)	release the button
4	lock or unlock the settings	release the button

▶ Press the button with a blunt object (e.g. pen).

9 Operation

The operation is maintenance-free. Ensure the following for a correct function:

▶ Keep the sensing face and the open space free of metal deposits and foreign bodies.
▶ Do not operate units with high field intensity (e.g. walkie-talkies) at close range to the speed monitor.